Series WBV/WV™

Oil Boilers

As an ENERGY STAR® Partner, PB Heat, LLC has determined that this product meets the ENERGY STAR guidelines for energy efficiency.

Installation, Operation & Maintenance Manual

PeerlessBoilers.com

TABLE OF CONTENTS

USING THIS MANUAL 1
A. INSTALLATION CLEARANCE 1
B. SPECIAL ATTENTION BOXES 1

1. PREINSTALLATION 2
A. CLEARANCES 2
B. AIR FOR COMBUSTION AND VENTILATION 2
C. CHIMNEY / VENT AND DRAFT CONTROL . .3
D. INSTALLATION SURVEY 3
E. PLANNING THE LAYOUT 3

2. BOILER PLACEMENT AND ASSEMBLY 4
A. SETTING THE BOILER 4
B. CONNECTING THE FLUE OUTLET 4
C. JACKET ASSEMBLY (KNOCKDOWN BOILERS) 4

3. PIPING AND CONTROLS 6
A. PRESSURE TEST BLOCK ASSEMBLY 6
B. BOILER RETURN CLEARANCE 6
C. WATER BOILER PIPING 6
D. STEAM BOILER PIPING 6
E. TANKLESS HEATER OR COVERPLATE 7
F. CONTROLS 7

4. ELECTRICAL 9
A. GENERAL 9
B. WIRING 9

5. BURNER SETUP & BOILER OPERATION 14
A. BURNER INSTALLATION 14
B. BURNER START-UP AND ADJUSTMENT . .14
C. CHECK BOILER CONTROLS 14
D. PURGE AIR FROM THE SYSTEM (WATER BOILERS ONLY) 14
E. CLEAN THE BOILER (STEAM BOILERS ONLY) 15

6. MAINTENANCE 17
A. GENERAL 18
B. DAILY MAINTENANCE (WITH BOILER OPERATING) 18
C. WEEKLY MAINTENANCE (WITH BOILER OPERATING) 18
D. MAINTENANCE OF SAFETY RELIEF VALVE 18
E. MONTHLY MAINTENANCE (WITH BOILER OPERATING) 18
F. MAINTENANCE – ANNUAL 18
G. IF A LONG SHUTDOWN IS REQUIRED . . .19

7. BOILER DIMENSIONS & RATINGS 20

8. REPAIR PARTS 22

USING THIS MANUAL

A. INSTALLATION CLEARANCE

Follow the installation instructions provided in this manual in the order shown. The order of these instructions has been set in order to provide the installer with a logical sequence of steps that will minimize potential interferences and maximize safety during boiler installation.

B. SPECIAL ATTENTION BOXES

Throughout this manual you will see special attention boxes intended to supplement the instructions and make special notice of potential hazards. These categories mean, in the judgment of PB Heat, LLC:

DANGER **Indicates a condition or hazard which will cause severe personal injury, death or major property damage.**

WARNING **Indicates a condition or hazard which may cause severe personal injury, death or major property damage.**

CAUTION **Indicates a condition or hazard which will cause minor personal injury or property damage.**

NOTICE **Indicates special attention is needed, but not directly related to potential injury or property damage.**

1. PREINSTALLATION

Read carefully, study these instructions before beginning work. It will save time. Study the included drawings. Save these instructions for reference.

This boiler must be installed by a qualified contractor.

The boiler warranty can be voided if the boiler is not installed, maintained and serviced correctly.

NOTICE **The equipment shall be installed in accordance with those installation regulations in force in the local area where the installation is to be made, including the current edition of *NFPA-31, Standard for the Installation of Oil-Burning Equipment*, and in Canada, *CSA B139, Installation Code for Oil Burner Equipment*. These shall be carefully followed in all cases. Authorities having jurisdiction shall be consulted before installations are made.**

CAUTION **Never burn garbage or paper in the unit, and never leave combustible material around it.**

CAUTION **Do not tamper with boiler controls.**

A. CLEARANCES

Table 1.1: Clearances from Jacket and Vent System

Required from Jacket to Combustible Construction		Recommended From Jacket for Accessibility and Mounting Controls
Top	5"*	24" to clean flueways.
Front	16.5"*	16.5" from jacket due to burner.
Left	2"*	12" due to burner swing radius.
Right	2"*	18" on steam with tankless heater or with Float LWCO.
		9" in area of boiler service switch and junction box.
Rear	2"*	9" for mounting relief valve in standard location**.
Vent Pipe (Single Wall) - 9" to Combustible Construction. Clearance may be reduced using methods in NFPA 31. **Vent Pipe (Double Wall)** - See Manufacturer's Instructions.		

* Consider also vent pipe clearance, including distance from edge of flue outlet to combustible construction (as applicable).

** See dimensional drawing for alternate relief valve location.

Unit may be installed on combustible flooring, provided the boiler is not set on carpet and a metal drip pan is placed under the appliance.

Unit may be installed in a closet with the above clearances. See also Section B, Air for Combustion and Ventilation.

B. AIR FOR COMBUSTION AND VENTILATION

1. Be certain adequate facilities are available to provide air for satisfactory combustion and ventilation.

2. Appliances Located in Unconfined Spaces.
   a. For installation in unconfined spaces with conventional construction and larger areas such as basements, the supply of air for combustion and ventilation can usually be considered adequate.

3. Appliances Located in Confined Spaces.
   a. All air from inside the building: Provide two permanent openings communicating directly with an additional room. If all air for combustion and ventilation is to come from within the building: two openings, one near the ceiling and one near the floor of the boiler room shall be provided with the minimum free area of each opening equal to 140 sq. in. per gallon of oil burned.

   b. If all air for combustion and ventilation is to come from outside the building: two openings, one near the ceiling and one near the floor of the boiler room shall be provided with the minimum free area of each opening equal to 35 sq. in. per gallon of oil burned.

   If ducts are used to convey the air, areas of 35 sq. in. per gallon of oil burned for vertical ducts or 70 sq. in. per gallon of oil burned for horizontal ducts are to be provided. Ducts shall have the same area as the free area of the openings to which they are connected.

C. CHIMNEY / VENT AND DRAFT CONTROL

CAUTION **An oil-fired unit shall be connected to a flue having sufficient draft at all times, to assure safe proper operation of the unit.**

1. Draft Requirement – Minimum draft required in the vent system is -.03" to -.06" W.C. depending on boiler model, see Table 7.1 (Section 7). This draft is necessary to provide the necessary draft over fire of -.01" to -.02" W.C. See discussion in paragraph 5 below regarding draft.

2. A barometric draft control is recommended for regulation of overfire draft. Follow manufacturer's instructions to locate and adjust the control.

3. Inspect the existing chimney or vent system. Make sure it is in good condition. Inspect chimney liner and repair or replace if necessary.

4. The vent system and installation must be in accordance with the current edition of the American National Standard ANSI/NFPA 211, "Chimneys, Fireplaces, Vents, and Solid Fuel Burning Appliances," or applicable provisions of the local building codes. Typical minimum chimney size is 8" x 8", 15 feet high, unless otherwise allowed by code. If the vent system is not sized properly, the burner may not operate properly. This can cause poor combustion, sooting and odors to occur.

5. Background Information Regarding Draft:
   Modern boilers operate with higher efficiencies than older boilers. Smaller flueways, as well as bars, pins and fins are designed into modern boilers to transfer as much heat as possible from the hot gases to the water or steam and prevent heat loss up the chimney. However, these design features result in higher pressure, or draft loss, in the boiler.

   This draft loss must be taken into account when installing an oil boiler into a new or old chimney. New chimneys are less likely to have poor draft. However, they must have sufficient draft to support combustion. A -.06" draft is desirable and preferred. Older chimneys may require a replacement liner to have them perform well enough to support combustion.

For Example:

	Old Installation	New Installation	Comments
Chimney Draft	-.04"	-.04"	No change, but older chimneys (especially unlined ones) have leaks which reduce draft.
Boiler Design Pressure Drop	+.01"	+.04"	Required for mandated efficiency increases.
Draft Over Fire	-.03"	0.00"	The old installation would have had a higher temperature in the chimney [as high as 800 degrees vs. 400 degrees F], which would increase the draft.

The above readings are "cold" readings (before the boiler and chimney are heated up).

Note also that the higher the firing rate on a unit which has multiple firing rates, the higher the draft required. For example, increasing the firing rate 1/4 gallon may increase the draft loss in a unit by approximately +.01".

D. INSTALLATION SURVEY

For new and existing installations, a Water Installation Survey or a Steam Installation Survey is available from P.B. Heat, LLC. The surveys will provide information on how the boiler works with your specific system and will provide an overview of boiler system operation in general.

You can also use this survey to locate system problems which will have to be corrected. To obtain copies of these Surveys, contact your PB Heat representative or download it from PeerlessBoilers.com.

E. PLANNING THE LAYOUT

Prepare sketches and notes of the layout of the installation. Include boiler location, venting system, existing piping and wiring. Show existing equipment that may interfere with installation of new equipment.

2. BOILER PLACEMENT AND ASSEMBLY

A. SETTING THE BOILER

1. Provide a level foundation, located as close as possible to the center of the heating system.
2. Refer to Figures 2.1 and 2.2 for exploded view of boiler while checking and/or assembling parts of the boiler.
3. On packaged boilers, open burner mounting plate (item 5) at this time to make certain the target wall (item 2) is seated in the back of the combustion chamber. (WBV-04™/WV-05™) Ceramic fiber blanket base liner (item 3) should be lying flat on bottom of combustion chamber between target wall and burner mounting plate. Close burner mounting plate.
4. See clearance information in Section I, "Preinstallation."

B. CONNECTING THE FLUE OUTLET

The WBV-03™ and WBV-04™ boiler models may be installed as a rear flue outlet unit or a top flue outlet unit. Packaged WBV-03™ and WBV-04™ boiler models are shipped as rear flue outlet and may be converted. The WV-05™ boiler model is only available as a top flue outlet unit. On Knockdown boilers, the flue outlet components are located in the water trim or steam trim carton.

1. If converting to a top flue application on a packaged boiler, remove the large knockout in the jacket top panel.
2. On Knockdown boilers, install the flue collector coverplate and blanket seal (items 10 and 11) on top of the block assembly using four (4) 5/16" x 1-1/2" studs, nuts and washers provided.
3. Mount the flue collar adapter and rope seal (items 14 and 12) to either the rear boiler section for a rear flue application, or to the flue collector cover plate (item 11) for a top flue application. Use 5/16" hex head bolts for rear flue outlet, and sheet metal screws for top flue outlet.
4. Attach the rear outlet cover plate (item 13) to the remaining unused opening using four (4) 5/16" bolts and washers provided.

C. JACKET ASSEMBLY (KNOCKDOWN BOILERS)

1. If the boiler is to be installed with a rear flue outlet, remove the square knock-out in the back panel.
2. Attach back panel to bosses on middle of back section with two 1/4" x 3/8" machine screws provided. The back panel has two 5/16" diameter holes close to the center of the panel.
3. Attach both the left and right side panels to the back panel and secure with sheet metal screws.
4. Remove the burner mounting plate (item 5) and make certain the target wall (item 2) is in correct position in back of chamber. Ceramic fiber blanket liner (item 3, WBV-04™ and WV-05™) should be on floor of boiler in front of target wall.
5. Remove the two (2) knockouts in the front jacket panel which will allow clearance for the hinge. Place the front jacket panel on the block and attach the left and right side panels in the same manner as they are attached to the back panel.
6. Reinstall the burner mounting plate.

Figure 2.1: Steam boiler

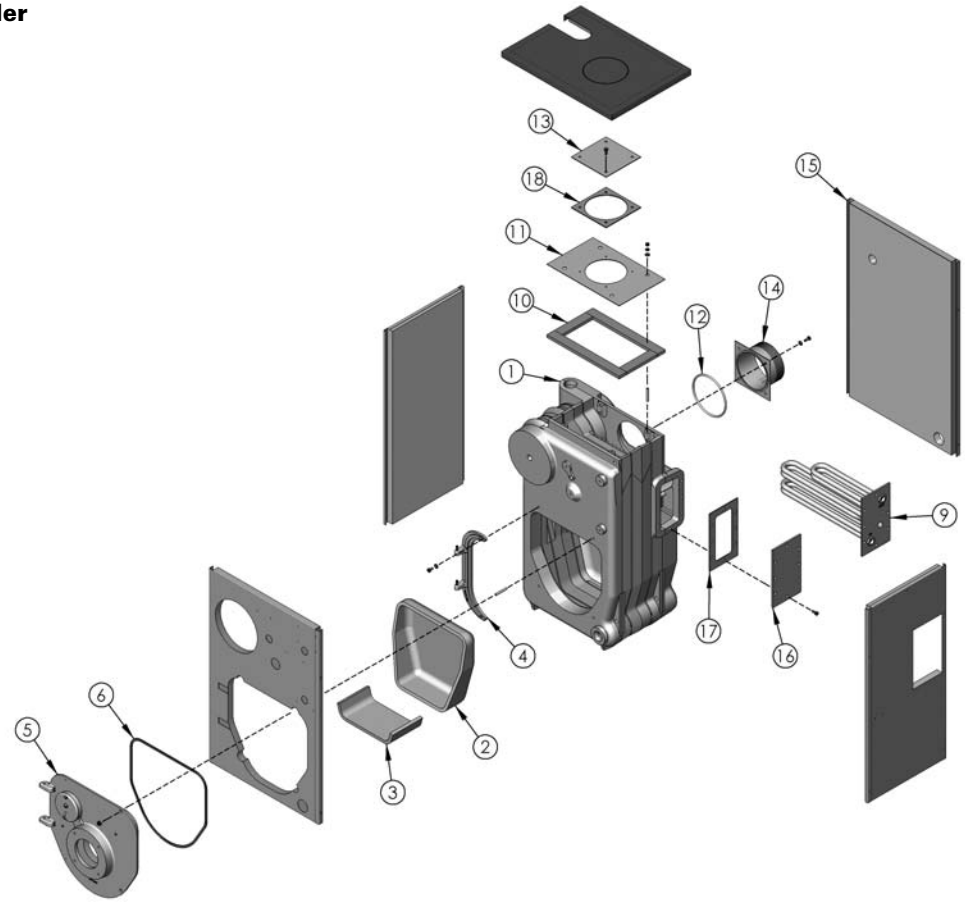

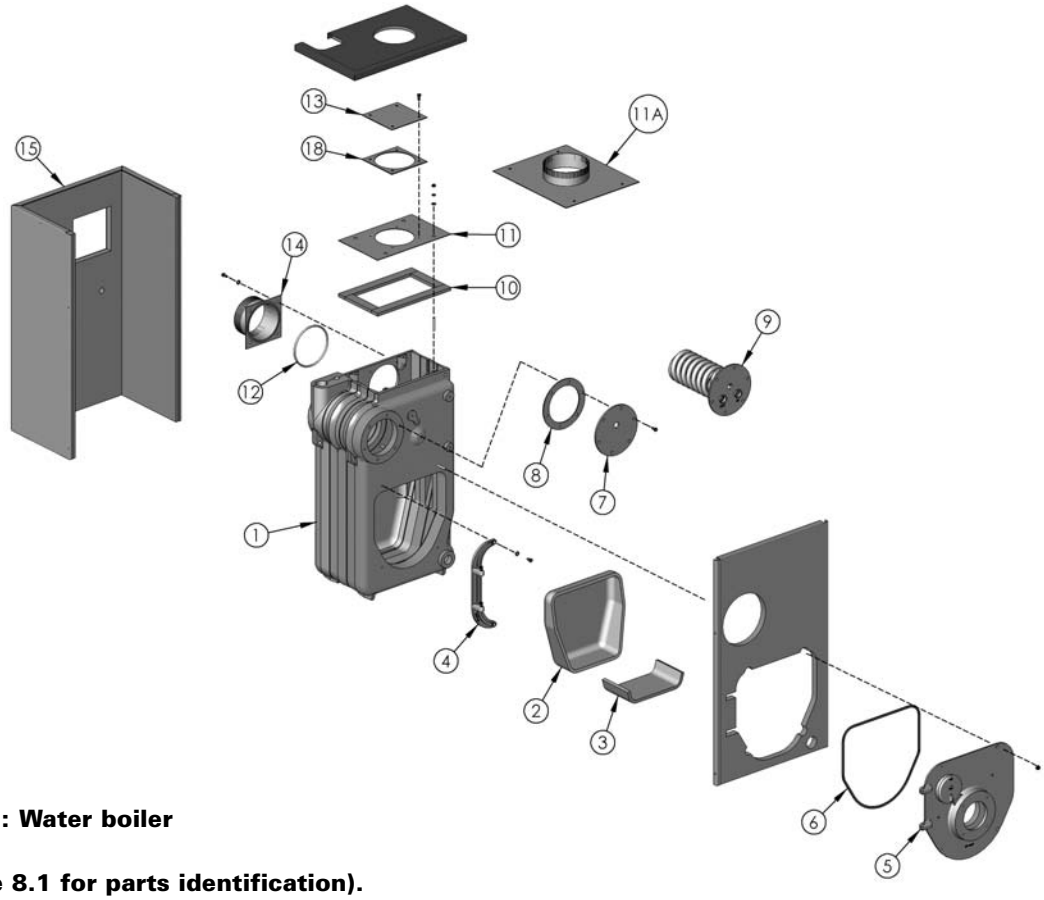

Figure 2.2: Water boiler

(See Table 8.1 for parts identification).

3. PIPING AND CONTROLS

NOTICE **Do not pipe boiler before jacket is installed.**

A. PRESSURE TEST BLOCK ASSEMBLY

1. Make up cold water supply connection to the boiler.
2. Install pressure gauge or pressure-temperature gauge in tapping provided. See Boiler Dimensional drawing, Figures 7.1 and 7.2 (Section 7)
3. Plug all open tappings in the boiler and fill with water. Apply approximately thirty (30) psig pressure. Check to make certain that all joints and fittings are water tight.
4. After all joints and connections have been proven tight, remove cold water supply and plugs from all tappings that are to be used. See Figures 7.1 and 7.2 (Section 7) for tapping locations.

B. BOILER RETURN CLEARANCE

Return piping must allow for opening and closing Burner Mounting Plate. PB Heat, LLC suggests installing a 1-1/4 NPT tee, a 90° elbow, and a 1-1/4 NPT x 5" long nipple in the return tapping before a vertical stand pipe is used.

C. WATER BOILER PIPING

1. Refer to the Water Installation Survey and Hydronics Institute Residential Hydronic Heating Installation/Design Guide for guidance.
2. The supply and return connections should be sized to suit the system. A 1-1/2" to 1-1/4" reducing coupling may be used where the system piping is 1-1/2".
3. The supply should be out the top of the back section and return to the bottom of the front section as shown in Figure 3.1. There is a 3/4" tapping in the top of the back section for air elimination.
4. When the return temperature from the system will be below 150°F on oil boilers for extended periods (heat pump systems, outdoor reset, snow melt, etc.), provide piping and controls to protect the boiler from condensation. Condensation will damage the boiler and will lead to shortened boiler life and maintenance problems.
5. If using a Partner indirect fired water heater or other, see Figure 3.6 for typical piping. Also refer to additional instructions supplied with the Partner.
6. If the boiler is to be used in conjunction with a refrigeration system, the chilled medium shall be piped in parallel with boiler and proper valves applied to prevent the chilled medium from entering the boiler. Refer to Figure 3.5.
7. If the boiler is connected to heating coils located in air handling units, the boiler piping system must be equipped with flow control valves or other automatic devices to prevent gravity circulation of the boiler water during the cooling cycle.

D. STEAM BOILER PIPING

1. Refer to the Steam Installation Survey and Hydronics Institute Residential Hydronic Heating Installation/Design Guide for assistance.
2. See table below for pipe sizing. The return loop from system should always enter equalizer through the Hartford Loop, 2" to 4" below normal water line. See Figure 3.2.

Boiler Model No.	Supply Riser "A"	Header "B"	Equalizer "C"
WBV-03	(1) 2"	2” or 3”	1-1/4"
WBV-04	(1) 2"	2” or 3”	1-1/4"

3. Use swing joints to attach header to avoid damage to the boiler due to thermal expansion and contraction of steam header pipe.
4. Pipe the steam header a minimum of 24" above the normal water line using swing joints to attach the risers into the steam header.

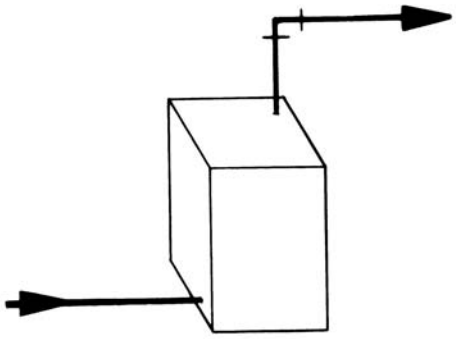

Figure 3.1: Water Boiler Piping

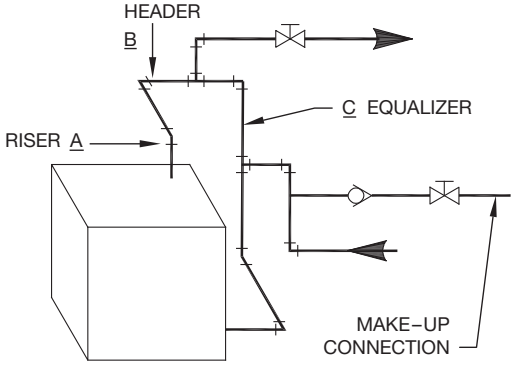

Figure 3.2: Steam Boiler Piping

E. TANKLESS HEATER OR COVERPLATE

1. If a tankless coil is used (item 9), install as pictured. On water boilers, install in opening in front section. On steam boilers, install in opening in rear section. For suggested piping of tankless water heaters refer to Figures 3.3 and 3.4.

DANGER **Install anti-scald device in hot water supply piping. Water temperature above 125°F can cause severe burns instantly or death from scalds.**

NOTICE **X1019R, X1020R, and PP1011R coils installed in WBV™ boilers have internal flow controls installed. Do not use external flow controls with these coils.**

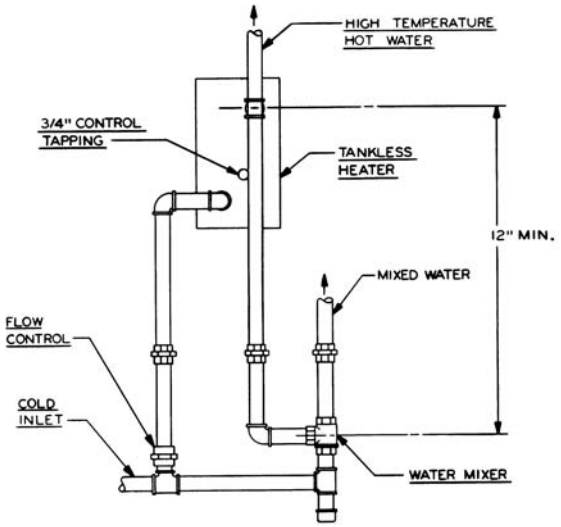

Figure 3.3: Tankless Coil Piping, Steam Boiler

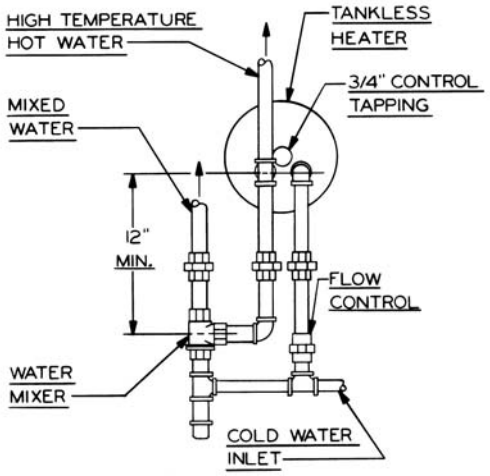

Figure 3.4: Tankless Coil Piping, Water Boiler

2. If not using a tankless coil, cover the heater opening with cover plate (item 7 or 16).

NOTICE **Be sure rubber gasket is in place between cover plate or water heater plate and boiler section.**

F. CONTROLS

CAUTION **Pipe the discharge of the safety valve or relief valve to prevent injury in the event of pressure relief. Pipe the discharge to a drain. Provide piping that is the same size as the relief valve.**

1. Water Boiler Controls:
   a. Install the limit / operating control, pressure-temperature gauge and safety relief valve. See Figure 7.1 (Section 7) for proper location. For installations subject to UL726, a second operating control that senses water temperature is also required (not provided). Use an L4080B or equivalent. Install in the supply piping near the boiler.

2. Steam Boiler Controls:
   a. Install the limit / operating control, pressure gauge, gauge glass trim and safety relief valve. See Figure 7.2 (Section 7), Figure 3.7 (float boilers) and cover photo (probe boilers).

   b. For installations subject to UL726, a second operating control that senses steam pressure is required (not provided). Use a PA404A or equivalent. On probe boilers, install the additional pressure control opposite the standard PA404A using a cross instead of a tee along with a second brass siphon (not provided). On float boilers, install the additional pressure control in the 1/4" tapping on the top of the float low water cut-off using a vertical (360°) brass siphon (not provided).

   c. For application of a probe low-water cut-off, use only Hydrolevel CG450. See Figure 7.2 (Section 7) for location. See also control manufacturers instruction sheet.

   d. See Figure 3.7 for application of float low water cut-offs.

3. For complete information on servicing and adjustment of controls, refer to the attached control specification sheets.

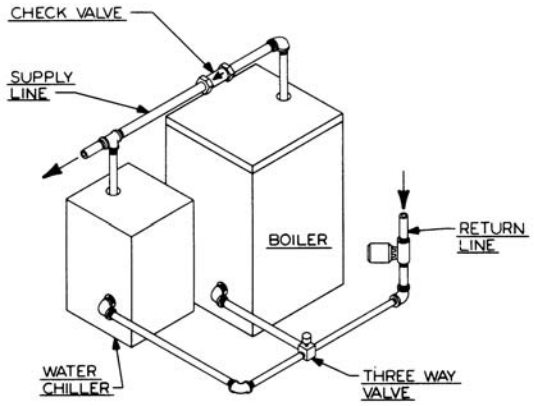

Figure 3.5: Piping to Isolate Boiler from Chilled Medium on Chiller Systems

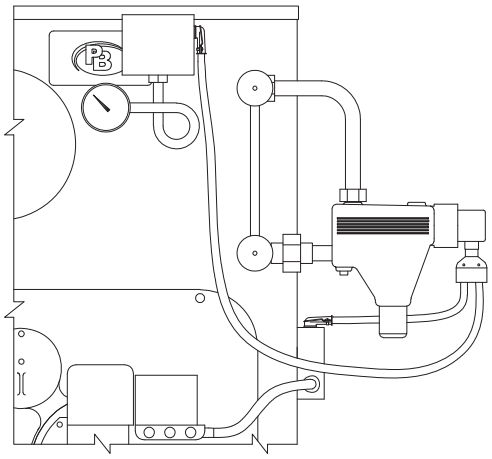

Figure 3.7: Float Low Water Cut-off

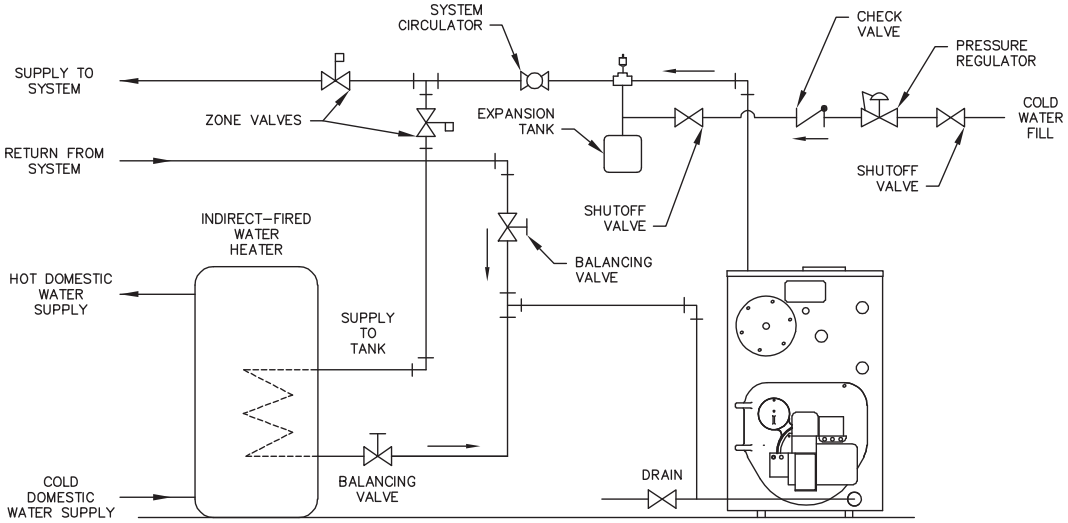

Figure 3.6: Piping with Peerless® Indirect Water Tank

4. ELECTRICAL

A. GENERAL

All electrical wiring shall be done in accordance with the National Electrical Code and Local Requirements. Single pole switches including those of safety controls or protective devices shall not be wired in a grounded line.

⚠ IMPORTANT

In accordance with Section 325 (f) (3) of the Energy Policy and Conservation Act, water boilers are equipped with a feature that saves energy by reducing the boiler water temperature as the heating load decreases. This feature is equipped with an override which is provided primarily to permit the use of an external energy management system that serves the same function.

THIS OVERRIDE MUST NOT BE USED UNLESS AT LEAST ONE OF THE FOLLOWING CONDITIONS IS TRUE:

- **An external energy management system is installed that reduces the boiler water temperature as the heating load decreases.**
- **This boiler is not used for any space heating.**
- **This boiler is part of a modular or multiple boiler system having a total input of 300,000 BTU/hr or greater.**
- **This boiler is equipped with a tankless coil.**

B. WIRING

1. See Section 5 for mounting burner.

2. Knockdown Boilers:
   Install junction box, limit harness, and Heyco bushing, each located in the trim carton. See Figure 4.2 or Figure 4.3. Mount junction box to the holes in the right side of jacket with (2) #10 x 1/2" sheet metal screws. Attach Heyco bushing to 7/8" knockout in left side of junction box. Connect limit harness to 7/8" knockout on top of junction box and insert limit harness Molex connector into Heyco bushing until it snaps firmly in place.

WARNING **Improper installation of burner harness can allow burner to energize with burner mounting plate open, creating a severe burn hazard to boiler maintenance personnel.**

3. Install burner harness located in the burner carton.

   Beckett or Carlin – PP7024 Harness (11-1/2" conduit)
   Riello – PP7023 Harness (17-1/2" conduit)

4. For complete information on servicing and adjustment of controls, refer to the attached control specification sheets.

5. See the following Wiring Diagrams:
   Figure 4.4 - Water Boilers, Beckett 7600A Limit Control
   Figure 4.5 - Water Boilers, Hydrolevel 3250 Limit Control
   Figure 4.6 - Steam Boilers with Float LWCO
   Figure 4.7 - Steam Boilers with Probe LWCO

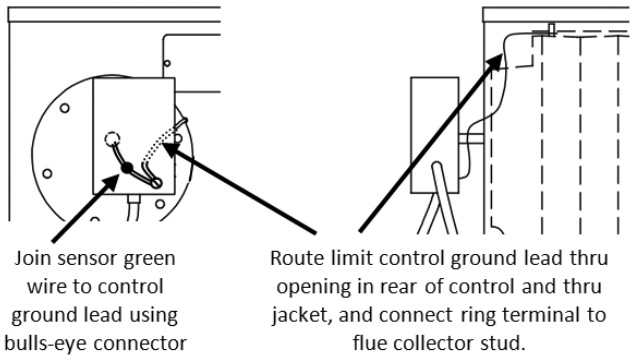

Figure 4.1: Connecting Ground Wire on Beckett Limit Control

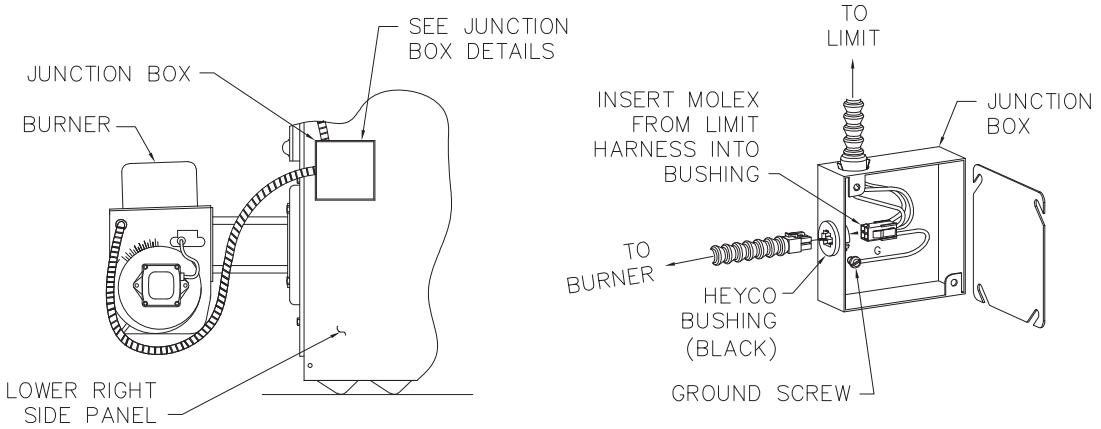

Figure 4.2: Junction Box Wiring, Knockdown Water Boilers

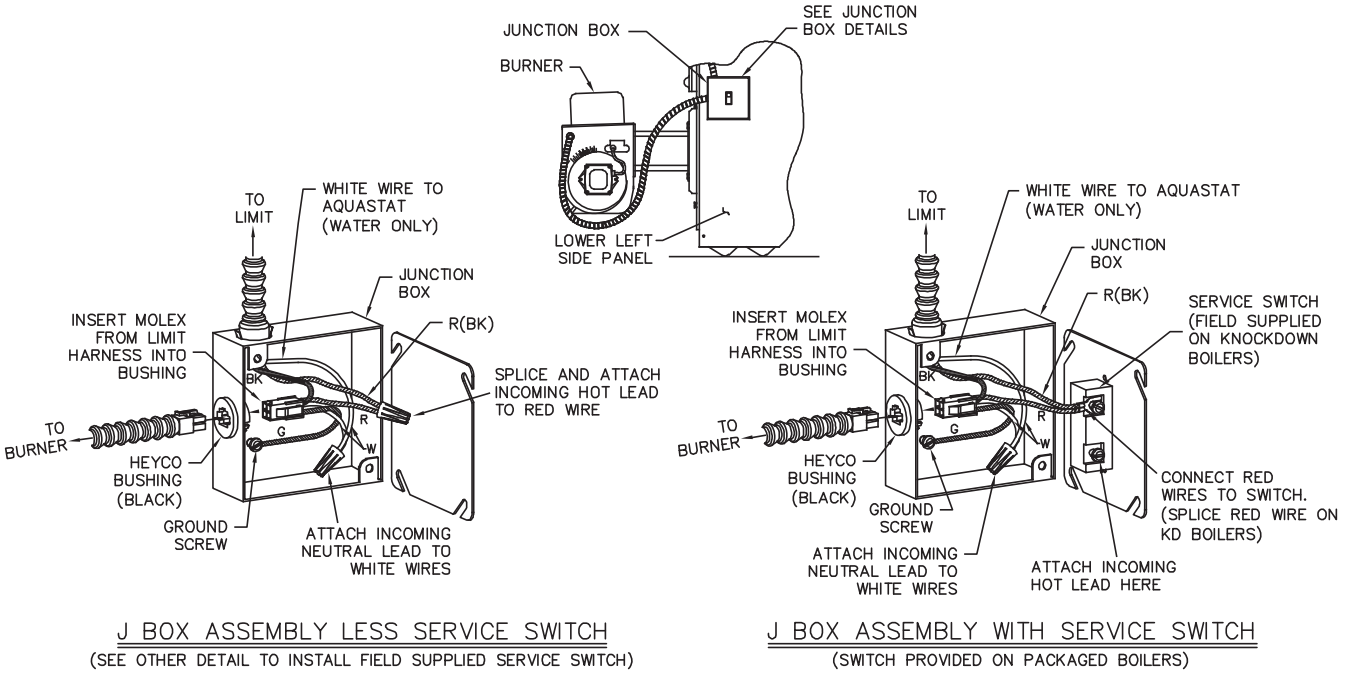

Figure 4.3: Junction Box Wiring, Steam Boilers

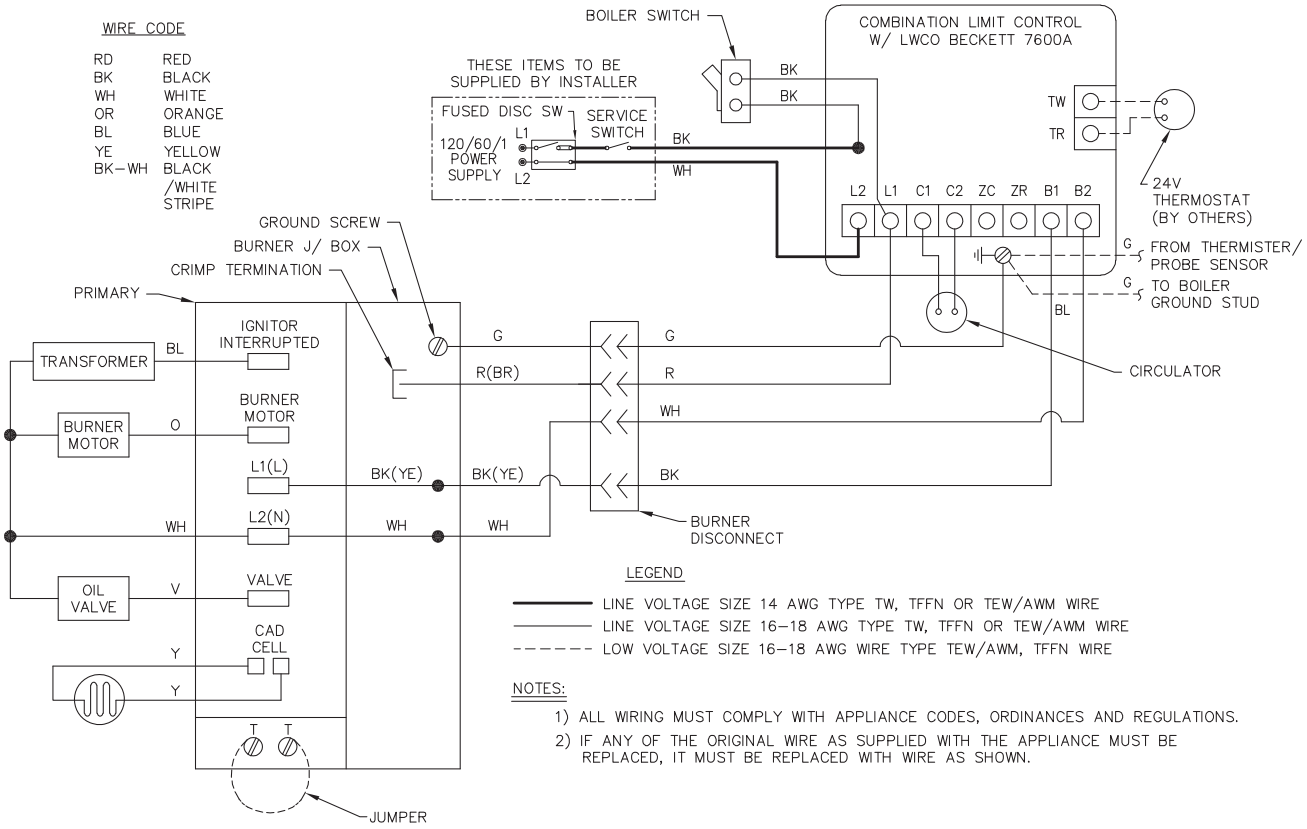

Figure 4.4: Water Boilers, Beckett 7600A Limit Control

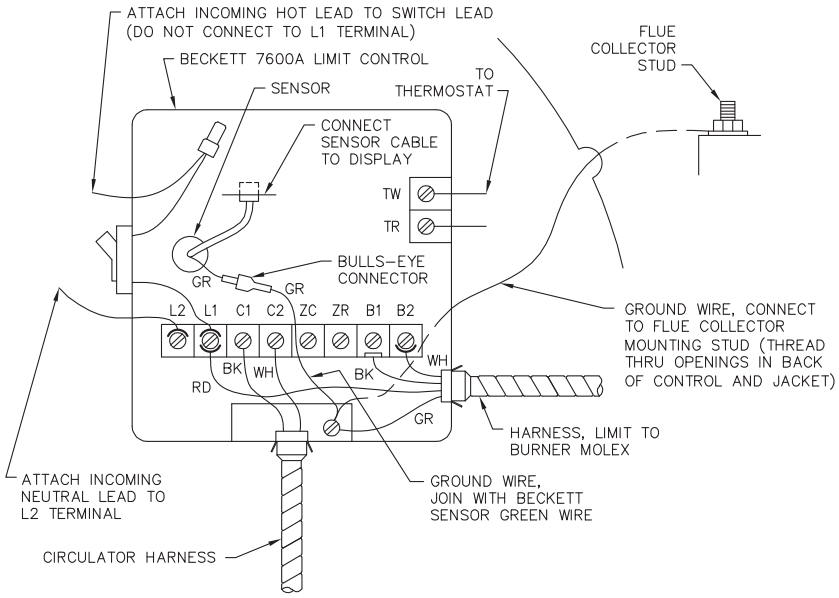

Figure 4.4a: Beckett AquaSmart 7600A Limit Control Wiring Details

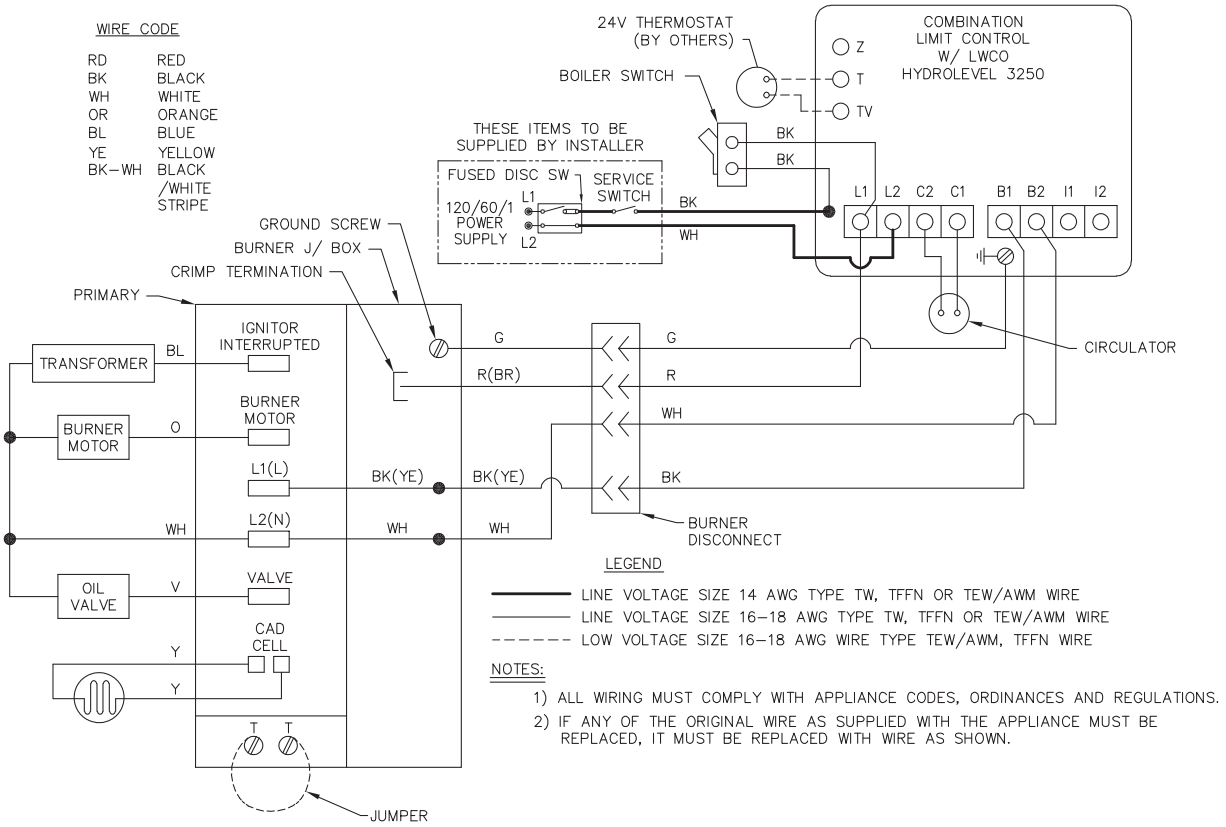

Figure 4.5: Water Boilers, Hydrolevel 3250 Limit Control

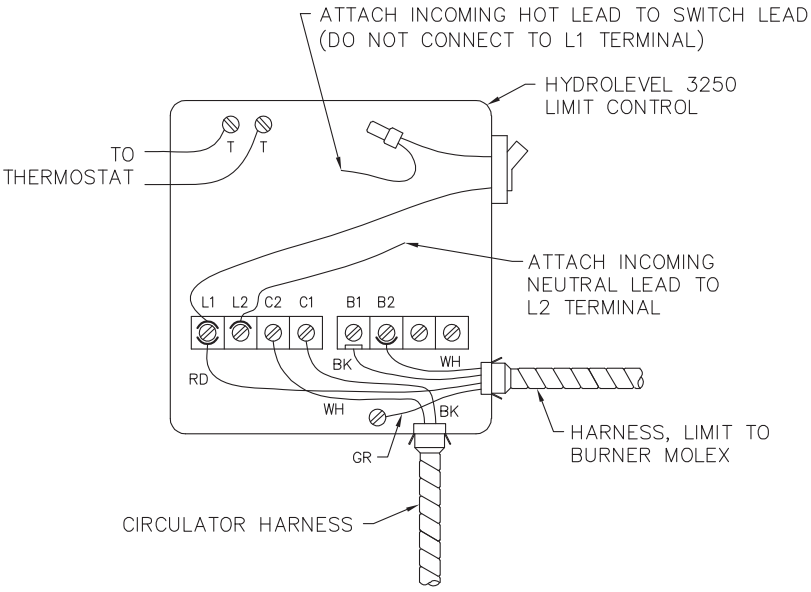

Figure 4.5a: Hydrolevel HydroStat 3250 Limit Control Wiring Details

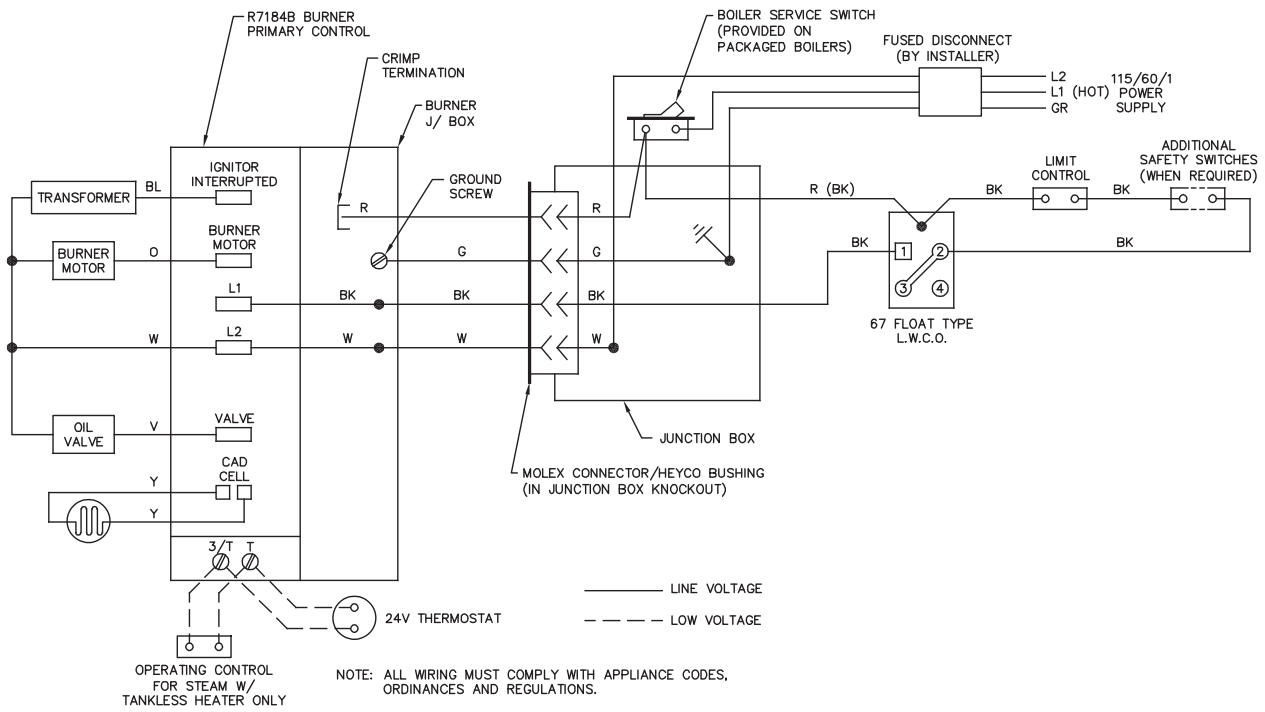

Figure 4.6: Steam with Float Low Water Cut-off

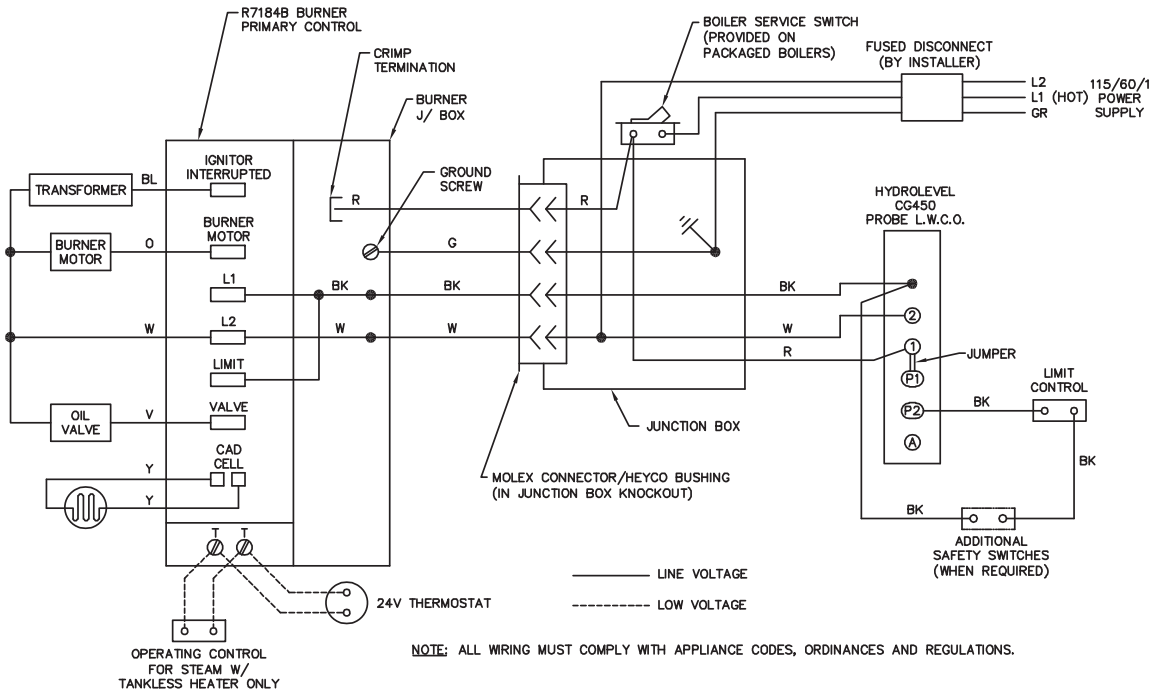

Figure 4.7: Steam with Probe Low Water Cut-off

5. BURNER SETUP & BOILER OPERATION

CAUTION **Burn only #2 Fuel Oil in this appliance. Do not use gasoline, crankcase drainings or any oil containing gasoline.**

A. BURNER INSTALLATION

1. The oil burner is supplied with a mounting flange fixed in position.
2. Mount the burner to the burner mounting plate (item 5) with four (4) 5/16" studs and nuts provided.

NOTICE **Be sure high temperature gasket is between the burner mounting flange and the burner mounting plate.**

3. Care must be taken when routing the oil lines so not to interfere with the opening and closing of the burner mounting plate. Flexible oil lines or flared copper disconnects with valves (when copper lines are used) may be installed to assure full opening of the burner mounting plate when servicing.

NOTICE **Two-pipe oil supply for Riello burner requires a separate kit. Order part #C7001026 from Riello dealer.**

4. Oil burner specifications:
   For information pertinent to the oil burner such as nozzle sizing, fuel supply piping, adjusting or servicing, refer to the charts in this section and the burner installation manual.

B. BURNER START-UP AND ADJUSTMENT

CAUTION **Do not start the burner unless all cleanout doors are in place.**

1. Burner should start automatically when thermostat is turned up and main boiler service switch is turned on. If burner does not start, check to be sure there is oil in the tank and push reset button on burner control:
   Beckett: Square red button.
   Carlin: Round red button.
   Riello: Round red button inside clear flexible cover on back of burner cover.

If burner still does not start, contact serviceman.

CAUTION **Do not attempt to start the burner when excess oil has accumulated, when the unit is full of vapor, or when the combustion chamber is very hot.**

2. Adjust burner and barometric draft control for highest CO_2 (Maximum 13%) while maintaining a 0 Smoke and -.01 to -.02" W.C. draft overfire.

   All adjustments must be made using suitable instruments such as found in a Bacharach Combustion Test Kit.

3. Burner and boiler can be shut down by turning down the thermostat and moving the main boiler service switch to the "off" position.
4. See burner manufacturer's manual for further information regarding the burner.

C. CHECK BOILER CONTROLS

1. Limit and Operating Controls:
   a. Lower the set point of each control until the burner shuts down. Note that the system pressure (or temperature) corresponds to the desired set point.
   b. Return the controls to the desired set point.
2. Low Water Cut-off (if used) - consult the manufacturer's instructions for the low water cut-off operational check procedure.

D. PURGE AIR FROM THE SYSTEM (WATER BOILERS ONLY)

1. Purge the system using purge valves, isolating zones in the process or use system vents. Do not operate the pump(s) while purging. Pumps will hold air in the eye of the impeller.
2. Allow the system to reach 180°F and use manual vents, if installed, to remove any remaining air. Watch the pressure gauge as the system approaches 180°F. If the pressure exceeds the design operating pressure, check:
   a. Fill valve pressure.
   b. Expansion or compression tank operation and sizing.

E. CLEAN THE BOILER (STEAM BOILERS ONLY)

1. Clean the boiler within one week after initial start-up. Cleaning will be more effective if boiler operates a day or two to loosen sediment and impurities in system.

2. Boiler must be cleaned to remove any accumulation of oil, grease, sludge, etc. in the system. These substances can cause foaming and surging of boiler water, producing an unstable water line and water carryover to system.

WARNING **Cleaning the boiler requires the use of very hot water and corrosive chemicals. Use care when handling to prevent injury.**

3. Connect a skim valve off the 1-1/4 NPT skim tapping on front of boiler. See WBV™ Steam Boiler Figure 7.2 (Section 7) to locate skim tapping. Run a drain line off skim valve to a point of safe discharge.

4. Provide a means of supplying continuous fresh water to the boiler for the cleaning process.

5. Use common washing soda, such as Arm and Hammer Super Washing Soda. Mix 1/2 pound of soda with water in a 10 quart pail. Pour the mixture into the boiler through the safety relief valve tapping.

6. Open the skim valve. Fill boiler until water begins to flow out of the valve.

CAUTION **Do not leave boiler unattended while firing burner. Operating boiler with water below minimum permissible water level may fracture sections.**

7. Turn on burner. Allow boiler water to heat up to just below steaming (180 - 200°F). Do not allow boiler to steam; steaming mixes up contaminants instead of floating them at surface.

8. Open make-up water valve to continually feed water to boiler. Adjust flow to maintain water temperature at 180 - 200° F.

CAUTION **Do not allow make-up water to flow too fast. Excessive quantities of cold water may fracture sections.**

9. Continue skimming boiler until water flowing from skim tapping flows clear. This will take some time, possibly several hours for a dirty system.

10. Turn off burner, close make-up water valve.

11. Drain boiler completely. Refill and drain one or two times to wash out all washing soda.

12. Remove skim valve and piping. Install 1-1/4"NPT plug in skim tapping.

NOTICE **If gauge glass becomes dirty more contaminants have worked loose in system. Repeat cleaning and skimming process as needed to clean system.**

Table 5.1: Beckett Burner Specifications

BECKETT BURNER SPECIFICATIONS								
Boiler Model No.	Burner Model No.	Burner Head	Static Plate	Nozzle Size	Pump Pressure	Start-up Settings		Head Setting
						Air Shutter	Air Band	
WBV-03-085	AFG-F3[1]	F3	3-3/8"	0.75 80° B HAGO[3]	140 PSI	6.0	1	N/A
WBV-03-105	AFG-F4	F4	3-3/8"	**0.90 80° B HAGO**	140 PSI	6.0	0	N/A
WBV-04-095	AFG-F4	F4	3-3/8"	0.85 80° B DEL[4]	140 PSI	6.0	0	N/A
WBV-04-125	AFG-F4	F4	3-3/8"	1.10 80° B HAGO[3]	140 PSI	5.0	2	N/A
WBV-04-150	AFG-F6	F6	2-3/4"	**1.25 80° B HAGO**	140 PSI	8.0	1	N/A
WV-05-175	AFG-MV1	V-1	-	1.50 60° B HAGO[3]	140 PSI	10.0	3	3
WV-05-195	AFG-MV1	V-1	-	**1.65 60° B HAGO**	140 PSI	10.0	9	3

BECKETT NX BURNER SPECIFICATIONS				
Boiler Model No.	Burner Model	Nozzle Size	Pump Pressure	Start Up Head/Air
WBV-03-085	NX70LB	0.65 x 60° W DEL[3]	170	1.5
WBV-03-105	NX70LB	**0.85 x 60° B HAGO**	170	2.5
WBV-04-095	NX70LB	0.75 x 60° W DEL[4]	170	2.0
WBV-04-125	NX70LD	1.10 x 60° W DEL[3]	140	1.0
WBV-04-150	NX70LD	**1.25 x 60° W DEL**	140	2.0

Note: Burner used to fire the WBV-03-085 and 1.05 rate is also required to fire the WBV-04-095 rate with nozzle indicated in above chart.

Table 5.2: Carlin Burner Specifications (with 98022 PSC motor)

CARLIN BURNER SPECIFICATIONS (WITH 98022 PSC MOTOR)						
Boiler Model No.	Burner Model No.	Head Bar	Nozzle Size	Pump Pressure	Start-up Settings	
					Air Shutter	Air Band
WBV-03-085	EZ-1HP	0.60 - 0.65	0.65 70° A DEL[3]	150 PSI	Blank	0.60
WBV-03-105	EZ-1HP	0.85 - 1.00	**0.85 70° A DEL**	150 PSI	Blank	0.65
WBV-04-095	EZ-1HP	0.75	0.75 70° A DEL[4]	150 PSI	Blank	0.60
WBV-04-125	EZ-1HP	0.85 - 1.00	1.00 70° A DEL[3]	150 PSI	Blank	0.85
WBV-04-150	EZ-1HP	1.10 - 1.25	**1.25 60° B DEL**	150 PSI	Blank	1.00
WV-05-175	99FRD	N/A	1.50 60° B HAGO[3]	150 PSI	Open	10% open
WV-05-195	99FRD	N/A	**1.65 60° B HAGO**	150 PSI	Open	45% open

Table 5.3: Riello Burner Specifications

RIELLO BURNER SPECIFICATIONS						
Boiler Model No.	Burner Model No.	Burner Series	Nozzle Size[2]	Pump Pressure	Start-Up Settings	
					Turbulator	Air Damper
WBV-03-060	F3	Series 40	**0.50 90° B**	145 PSI	0.0	2.9
WBV-03-085	F5	Series 40	0.65 60° W[3]	170 PSI	1.0	2.45
WBV-03-105	F5	Series 40	**0.85 60° W**	165 PSI	2.5	2.8
WBV-04-095	F5	Series 40	0.75 80° B[4]	160 PSI	0.5	2.25
WBV-04-125	F5	Series 40	1.00 60° W[3]	155 PSI	2.5	3.4
WBV-04-140	F5	Series 40	**1.10 60° W**	160 PSI	4.0	4.2
WV-05-175	F10	Series 40	1.35 60° B[3]	165 PSI	2.0	2.5
WV-05-195	F10	Series 40	**1.50 60° B**	170 PSI	2.5	2.8

Factory Installed Nozzles (Packaged Boilers or Burner Cartons) are indicated in **Boldface**.

1 Requires Low Firing Rate Baffle

2 Delavan Recommended

3 Shipped Loose with Packaged Boiler or Burner Carton

4 Not included with Packaged Boiler or Burner Carton

6. MAINTENANCE

WARNING

Product Safety Information
Refractory Ceramic Fiber Product

This appliance contains materials made from refractory ceramic fibers (RCF). Airborne RCF, when inhaled, have been classified by the International Agency for Research on Cancer (IARC), as a possible carcinogen to humans. After the RCF materials have been exposed to temperatures above 1800°F, they can change into crystalline silica, which has been classified by the IARC as carcinogenic to humans. If particles become airborne during service or repair, inhalation of these particles may be hazardous to your health.

Avoid Breathing Fiber Particulates and Dust

Suppliers of RCF recommend the following precautions be taken when handling these materials:

Precautionary Measures:
Provide adequate ventilation.
Wear a NIOSH/MSHA approved respirator.
Wear long sleeved, loose fitting clothing and gloves to prevent skin contact.
Wear eye goggles.
Minimize airborne dust prior to handling and removal by water misting the material and avoiding unnecessary disturbance of materials.
Wash work clothes separately from others. Rinse washer thoroughly after use.
Discard RCF materials by sealing in an airtight plastic bag.

First Aid Procedures:
Inhalation: If breathing difficulty or irritation occurs, move to a location with fresh clean air. Seek immediate medical attention if symptoms persist.
Skin Contact: Wash affected area gently with a mild soap and warm water. Seek immediate medical attention if irritation persists.
Eye Contact: Flush eyes with water for 15 minutes while holding eyelids apart. Do not rub eyes. Seek immediate medical attention if irritation persists.
Ingestion: Drink 1 to 2 glasses of water. Do not induce vomiting. Seek immediate medical attention.

A. GENERAL

1. Check pipes adjacent to cold walls or in unheated spaces. Insulate and tape them if necessary to be sure they can't freeze up. Keeping the water moving at all times will reduce the likelihood of freezing.

2. If there is considerable foreign matter in the boiler water, the boiler should be shut down and allowed to cool, then drained and thoroughly flushed out. Drain the boiler at the drain cock. Pipe the drain cock to a suitable drain or containment device (if antifreeze is used). Flush the system to remove remaining matter. If there is evidence that hard scale has formed on the internal surfaces, the boiler should be cleaned by chemical means as prescribed by a qualified water treatment specialist.

3. There must be no signs of continuous wetness at the chimney. If signs of continuous wetness are observed, a qualified service agency must be consulted to modify the vent configuration to prevent the formation of condensate, which may damage the vent pipe.

WARNING **Do not use this appliance if any part has been under water. Improper or dangerous operation may result. Immediately call a qualified service technician to inspect the boiler and to replace any part of the control system and any control which has been under water.**

B. DAILY MAINTENANCE (WITH BOILER OPERATING)

Daily boiler observation can be performed by the owner. If any potential problems are found, a qualified installer or service technician/agency must be notified.

1. Remove any combustible materials, gasoline and other flammable liquids and substances that generate flammable vapors from the area where the boiler is contained. Make certain that the boiler area has ample air for combustion and ventilation and that there are no obstructions to the free flow of air to and from the boiler.

2. Observe general boiler conditions (unusual noises, vibrations, etc.)

3. Observe operating temperature and/or pressure gauge on the boiler. Boiler pressure should never be higher than 5 psi below the rating shown on the safety relief valve. The valve rating can be found on the top of the safety relief valve. Boiler temperature should never be higher than 250°F.

4. Check for water leaks in boiler and system piping.

C. WEEKLY MAINTENANCE (WITH BOILER OPERATING)

1. Flush float-type low-water cut-off (if used) to remove sediment from the float bowl as stated in the manufacturer's instructions.

D. MAINTENANCE OF SAFETY RELIEF VALVE

1. Check function and maintain safety relief valve as specified by manufacturer, typically every other month or every month, per the instructions on the tag on the safety relief valve.

E. MONTHLY MAINTENANCE (WITH BOILER OPERATING)

1. Check boiler room floor drains for proper functioning.

2. Test probe type low-water cut-off (if used) by using the Push-to-Test Button.

CAUTION **Turn off power to boiler before adjusting limit control.**

3. Test limit by lowering the limit set point until the burner shuts down. When proper operation is confirmed, return the set point to original setting.

4. Follow additional instructions in the Burner Manual for proving the burner component operation.

F. MAINTENANCE – ANNUAL

NOTICE **Entire heating system, including boiler, burner and venting system, must be inspected at least once a year by a qualified heating professional. Boiler is to be cleaned at least once a year.**

WARNING **Disconnect all power to the burner before accessing combustion chamber.**

TO CLEAN:

1. Remove top jacket panel and flue collector cover plate, Item 11 (Figure 2.1 or 2.2).

2. To thoroughly clean the boiler it must be brushed down from the top. Alternatively, for limited space or minimum clearance to combustible installations, cleaning the heat exchanger from the combustion chamber side is acceptable. If unit is extremely dirty, it may be necessary to brush from both directions. The target wall is made of a soft ceramic fiber. Care must be taken not to damage this material during cleaning.

3. Remove any scale or soot from the combustion chamber area by vacuum cleaning or any other available means.

NOTICE **Burner mounting plate must be opened to facilitate this operation.**

4. Replace oil burner and flue collector cover plate making sure all gaskets are in place.

5. Replace jacket top panel.

NOTICE **All cover plates, enclosures, and guards must be maintained in place at all times, except during maintenance and servicing.**

6. Inspect venting system.

G. IF A LONG SHUTDOWN IS REQUIRED

1. To take boiler out of service if the boiler and system are not to be used when temperatures are below freezing:
   a. Drain the boiler and system completely and shut off make-up water supply.
   b. Open main line power disconnect switch to boiler. Remove the fuses or secure the switch so that the power cannot be turned on accidentally.

2. Be certain that the boiler and system are refilled before returning to service.

CAUTION **Always keep the manual fuel supply valve shut off if the burner is shut down for an extended period of time.**

7. BOILER DIMENSIONS & RATINGS

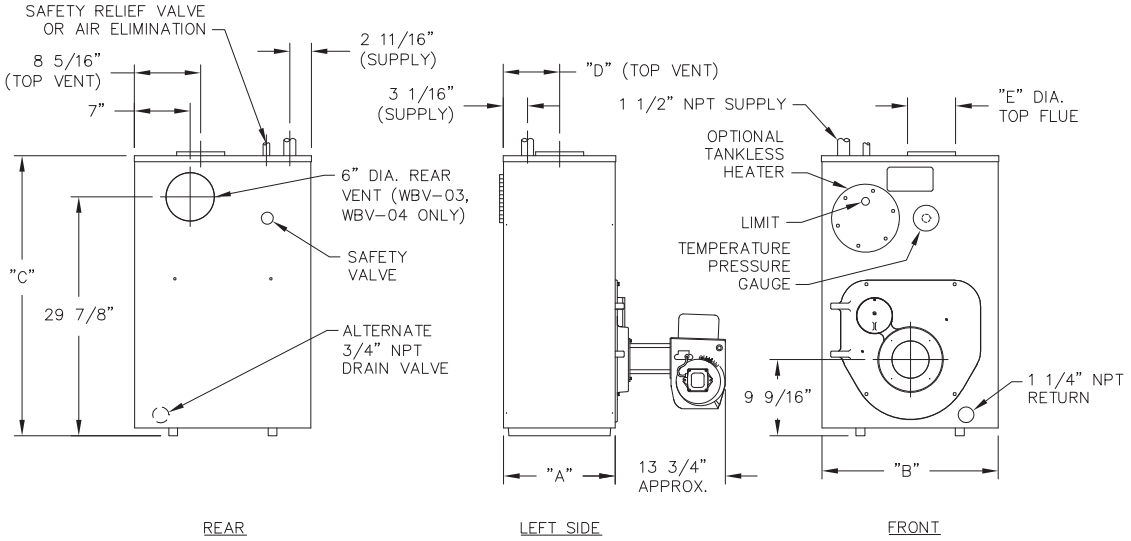

Boiler Model Number	Jacket Depth "A"	Jacket Width "B"	Jacket Height "C"	Rear of Jacket to c/l of Vent "D"	Vent Size Diameter "E"
WBV-03-085/110	14-1/8"	22-1/8"	35"	7-1/16"	6"
WBV-04-125/150	18-1/8"	22-1/8"	35"	9-1/16"	6"
WV-05-175/200	22-1/8"	22-1/8"	35"	11-1/16"	7"

Figure 7.1: Boiler Dimensions, Water Boiler

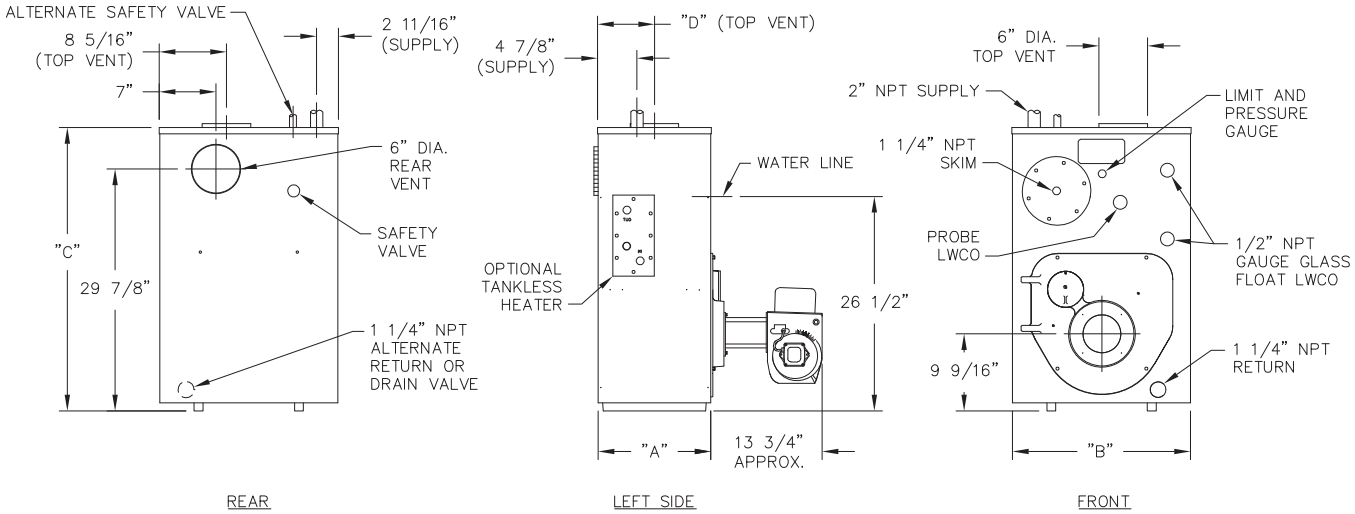

Boiler Model Number	Jacket Depth "A"	Jacket Width "B"	Jacket Height "C"	Rear of Jacket to c/l of Vent "D"
WBV-03-085/110	15-3/4"	22-1/8"	35"	8-7/8"
WBV-04-125/150	19-3/4"	22-1/8"	35"	10-7/8"

Figure 7.2: Boiler Dimensions, Steam Boiler

Table 7.1: Boiler Ratings

SERIES WBV/WV™ BOILER RATINGS

Series WBV/WV™												
Boiler Model Number	Input		Heating Capacity[5], MBH		Net Ratings[4]			AFUE, %		Water Content, gal		Minimum Stack Draft Required, in. W.C.
	GPH[1]	MBH	Water	Steam	Steam, sqft	Steam, MBH[3]	Water, MBH[2]	Water	Steam	Water	Steam	
WBV-03	0.60✚✪	84	75	–	–	–	65	87.5✱	–	11.75	–	-0.03
WBV-03	0.85	119	104	103	321	77	90	86.2	84.8	11.75	12.00	-0.04
WBV-03	1.05	147	126	124	388	93	110	85.0	83.6	11.75	12.00	-0.05
WBV-04	0.95✚	133	117	–	–	–	102	87.0✱	–	14.75	–	-0.03
WBV-04	1.25	175	151	151	471	113	131	85.4	85.3	14.75	14.87	-0.04
WBV-04	1.50	210	180	179	558	134	156	85.1	84.3	14.75	14.87	-0.05
WV-05✝	1.75	245	212	–	–	–	184	85.5	–	17.75	–	-0.05
WV-05✝	1.95	273	235	–	–	–	204	85.0	–	17.75	–	-0.06

✱ As an ENERGY STAR® Partner, PB Heat, LLC has determined that these firing rates meet the ENERGY STAR guidelines for energy efficiency.
✝ Top venting only.
✚ Nozzles for these firing rates not provided as standard equipment. Consult factory for price and availability.
✪ This firing rate can only be achieved with a Riello F-3 burner. See Table 5.3.
1 Burner input based on No. 2 fuel oil with a heating value of 140,000 Btu per gallon.
2 Net water ratings based on an allowance of 1.15.
3 Net steam ratings based on an allowance of 1.333.
4 Consult factory before selecting a boiler for installations having unusual piping and pickup requirements, such as intermittent system operation, extensive piping systems, etc.
5 Heating Capacity and Annual Fuel Utilization Efficiency (AFUE) ratings are based on U.S. Government tests, with 13% CO_2 and –0.02" w.c. draft over fire. Before purchasing this appliance, read important information about its estimated annual energy consumptions or energy efficiency rating that is available from your retailer.
6 Chimney Size: 8" x 8" x 15 ft.

8. REPAIR PARTS

Repair parts are available from your local PB Heat, LLC distributor or from Parts To Your Door at 1 (610) 916-5380 (www.partstoyourdoor.com).

Note: Remember to include the boiler model number and serial number when ordering parts.

Table 8.1

Item No.*	Description	Additional Information	Stock Code
1	Block Assembly – Water – WBV-03(Open)	–	90190
	Block Assembly – Water – WBV-04 (Open)	–	90191
	Block Assembly – Water – WBV-05 (Open)	–	90192
	Block Assembly – Water – WBV-03 (Closed)	–	90348
	Block Assembly – Water – WBV-04 (Closed)	–	90349
	Block Assembly – Steam – WBV-03 (Open)	–	90707
	Block Assembly – Steam – WBV-04 (Open)	–	90708
2	Target Wall	–	50795
4	Swing Door Hinge	–	90538
5	Burner Mounting Plate Assembly	–	90158
–	Burner Mounting Plate Insulation	–	50794
6	Burner Mounting Plate Rope Seal	–	51210
7	Steel Cover Plate (Front) – Water	–	99812
8	Rubber Gasket (Front) – Water	–	51800
9	Tankless Coil – WBV-03 – Water	–	90637
	Tankless Coil – WBV-04 – Water	–	90534
	Tankless Coil – WV-05 – Water	–	90534
	Tankless Coil – WBV-03 & 04 – Steam	–	PP-1011R
10	Flue Collector Plate Blanket Seal	–	90999
11	Flue Collector Cover Plate – WBV-03	–	90565
–	Flue Collector Cover Plate – WBV-04	–	90566
11A	Top Outlet Flue Collector Plate – WV-05	–	90562
12	Rope Seal	–	51209
13	Rear Outlet Cover Plate	–	90563
14	Flue Collar Adapter – WBV-03 & 04 – Water	–	90568
	Flue Collar Adapter – WBV-03 & 04 – Steam	–	90386
15	Jacket Assembly – Water – WBV-03	–	90291
	Jacket Assembly – Water – WBV-04	–	90288
	Jacket Assembly – Water – WV-05	–	90290
	Jacket Assembly – Steam – WBV-03	–	90292
	Jacket Assembly – Steam – WBV-04	–	90289
16	Steel Cover Plate (Rear)	–	90141
17	Rubber Gasket (Rear Section Plate)	–	51673
18	Flue Outlet Gasket	–	PP5011
–	Pressuretrol	–	51324
–	Drain Valve	–	50764
–	Relief Valve – Water	–	50501
–	Pop Safety Valve – Steam	–	50510
–	Insulation Hardware	–	91218
–	Limit Control, Beckett AquaSmart 7600A	–	50337
–	Immersion Well, Beckett 7600T	–	50341
–	Immersion Sensor, Beckett 7600P	–	50339
–	Limit Control with Sensor, Hydrolevel HydroStat 3250	–	50343
–	Immersion Well, Hydrolevel	–	50723

Part numbers may be subject to change without notice.
*See Figures 2.1 & 2.2 on page 5 for boiler exploded view.

NOTES

Series WBV/WV™

Oil Boilers

Installation, Operation & Maintenance Manual

TO THE INSTALLER:

This manual is the property of the owner and must be affixed near the boiler for future reference.

TO THE OWNER:

This boiler should be inspected annually by a Qualified Service Agency.

PeerlessBoilers.com

PB HEAT, LLC

131 S. CHURCH ST • BALLY, PA 19503

Service Information

Name: _____

Address: _____

_____

Phone: _____

©2015 PB Heat, LLC. All rights reserved.

PP8046 R30 (9/15-5M)
Printed in U.S.A.