PFC CONDENSING BOILERS - SUBMITTAL DATA SHEET

RATINGS AND CAPACITIES		
Input - Low Fire	**800,000**	BTU/HR
Input - High Fire	**3,999,000**	BTU/HR
Output - High Fire	**3,880,000**	BTU/HR
Boiler Horsepower	**115.9**	BHP
Thermal Efficiency	**97.0%**	
Low Fire Thermal Efficiency	**Up to 99%**	
Heating Surface	**403**	Sq.Ft.
Water Content	**45.3**	Gallons
Fuel	**Natural Gas or Propane**	
Firing Rate	**Full Modulation**	
Burner Turndown	**5:1**	
Low NOx Emissions	**< 10 ppm**	
Inlet Gas Pressure (NG)	**4" wc**	Min.
Inlet Gas Pressure (Propane)	**8" wc**	Min.
	14" wc	Max.
Shipping Weight, Approximate	**2,485**	lbs

ASME Section IV (Max 160 PSIG / 210°F)

ETL Certified to ANSI Z21.13 / CSA 4.9

ETL Certified to UL 795 / CSA 3.1

DIMENSIONS / CONNECTIONS		
- Height	**55"**	(Note 1)
- Width	**46"**	(Note 2)
- Length	**97-1/8"**	(Note 3)
- Supply Connection	**4" Grooved**	
- Return Connection	**4" Grooved**	
- Vent / Air Intake Connections	**12"**	
- Gas Connection	**2" NPT**	

STANDARD EQUIPMENT

- ASME Stainless Steel Heat Exchanger
- Stainless Steel Pre-Mix Burner
- Variable Speed Combustion Blower
- Honeywell SOLA Control
- High Limit Temperature Control, Manual Reset
- Water Flow Switch
- Low Water Cutoff, Manual Reset
- Condensate Trap
- Blocked Condensate Switch
- ASME Pressure Relief Valve
- Pressure / Temperature Gauge
- Supply & Return Temperature Sensors
- Flue Gas Temperature Sensor
- Modulating Gas Valve
- Direct Spark Ignition and UV Scanner
- High/Low Gas Pressure Switches, Manual Reset
- Combustion Air Switch
- Blocked Vent Switch
- 208-240-460v/3ph/60hz Line Voltage
  - Amp Draw: 208v (11.0); 240v (9.9) and 460v (6.4)
- Category II and IV Venting
- Individual or Common (Engineered) Vent System
- CPVC, Polypropylene & Stainless Steel Acceptable *Material
- Sealed or Room Combustion Air Intake
- Up to 300 ft equivalent venting / air intake

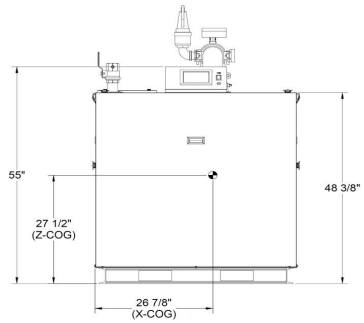

Front View

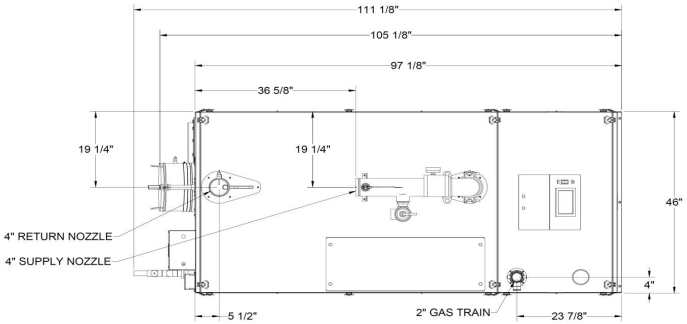

Top View

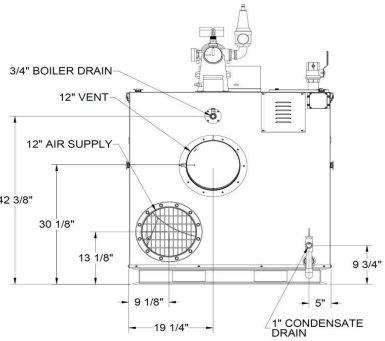

Rear View

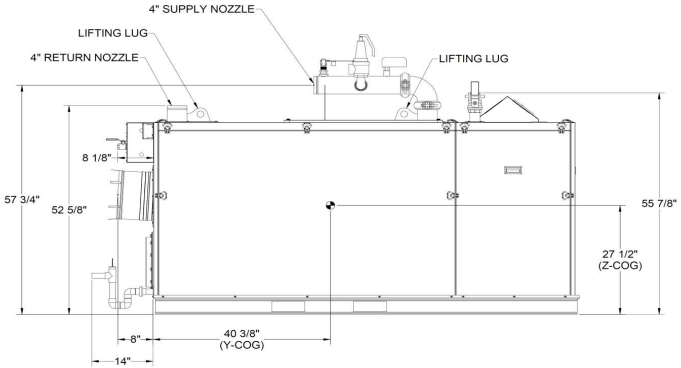

Left Side View

NOTES:
1. Height dimension is from floor to top of control box.
2. Width does not include jacket butterfly clips that require 3/4" +/- clearance on each side.
3. Length is the measurement of the boiler skid base.
4. Dimensions shown are for reference only

FLOWS AND PRESSURE DROPS		
Delta T	**Flow (GPM)**	**△ P (Ft. Hd)**
20°F △ T (Max)	**388**	**19.9**
25°F △ T	**310**	**12.9**
30°F △ T	**259**	**9.7**
35°F △ T	**222**	**7.9**
40°F △ T	**194**	**6.5**
45°F △ T	**172**	**5.5**
50°F △ T	**155**	**4.4**
55°F △ T (Min)	**141**	**4.2**

PFC-4000

PROPERTY OF

PeerlessBoilers.com

* Flue system material shall be capable of continuous operation at 210°F or higher and shall be certified to UL 1738 – venting system for gas-burning appliances cat II, III and IV.

Updated 03/07/2024

(Drawing No.: PFC-8209 R1)