Series 211A™

PeerlessBoilers.com

211A-10 Features and Standard Equipment

Performance:

- Full Load Thermal Efficiency 79.0%
- Reliable atmospheric burner design
- High-capacity cast iron heat exchanger
- Electronic spark ignition for dependable burner operation
- Available in steam models only
- Suitable for firing natural or LP Gas

Construction:

- Designed, constructed and stamped in accordance with ASME Boiler & Pressure Vessel Code, Section IV
- Precision-machined cast iron sections sealed with injection molded flex-seal flow port gaskets
- Assembled with individual draw rods to facilitate ease of assembly and service
- High temperature rope seal ensures a tight seal between castings to prevent flue gas leaks
- Factory-assembled gas train
- Available as Knockdown or Packaged unit
- Built-in horizontal to vertical draft hood provides low profile design – ideal for installations with low ceilings
- Natural draft venting (Category I)
- Assembled insulated, steel frame that is fork truck, pallet jack, or crane compatible
- Maximum allowable working pressure: 15 PSI
- Insulated flush jacket with exclusive access design – accessibility to flue ways from both ends for inspection and cleaning without removing entire jacket
- Easy access to electrical wiring
- Aluminized steel flue collectors provide a durable, corrosion-resistant path for directing flue gases to the vent connection

Standard Equipment Safety Features:

- 15 PSIG ASME safety relief valve (loose)
- Pressure gauge (loose)
- 120V gas valves provide positive fuel shutoff upon a safety or operating control interruption
- Operating pressure control, PA404A, maintains boiler pressure within specified operating range.
- High limit pressure control, manual reset, L4079B, provides an additional safety limit to prevent excessive boiler pressure
- Float type low water cutoff, McDonnell & Miller Series 67, protects the boiler from operation under low-water conditions
- Probe-type manual reset low water cutoff, OEM550P, provides an additional low-water safety and requires manual reset following a low-water shutdown

Combustion System:

- Stainless Steel Burners
- E1-E Spark Ignition System provides reliable electronic ignition of intermittent burning pilot and flame supervision with 100% shutoff – natural and LP gas
- Includes pilot pressure regulator, pilot gas valves, ignition transformer, terminal strip assembly, ignition cable, and flame sensing wire

Honeywell RMA7890A2056 Control Features:

- Automatic primary control on/off burner sequencing
- Flame supervision
- System status indication
- System or self-diagnostics and troubleshooting
- Preignition interlock input
- Selectable intermittent/interrupted pilot function
- Run/test switch for interrupted pilot setup
- Blinkum fault annunciation on safety shutdown allowing easy access to read the blink code off the face of the unit
- Built-in features set up only using S7800A1142 display
- Valve proving system
- Alarm contacts remain open during normal operation and close immediately upon a safety lockout/flame failure to provide a 120V output for local alarms or Building Automation Systems remote fault tracking

Codes and Warranty:

- One-year parts and labor warranty
- 10-year limited Warranty
- CSD-1 compliant
- Design certified to ANSI Z21.13

Technical Information

SERIES 211A™ BOILER RATINGS										
BOILER MODEL NUMBER	NATURAL GAS RATINGS								EFFICIENCY	
	INPUT		OUTPUT		NET RATINGS					
					STEAM EDR		STEAM		THERM	COMB
	MBH	KW	MBH	KW	SQ.FT	M^2	MBH	KW	%	%
211A-09	1,680	492	1,327	389	4,146	385	995	292	79	80

SERIES 211A™ BOILER RATINGS										
BOILER MODEL NUMBER	LP GAS RATINGS (2500 BTU/CU. FT.; 93,000 KJ/M^3								EFFICIENCY	
	INPUT		OUTPUT		NET RATINGS					
					STEAM EDR		STEAM		THERM	COMB
	MBH	KW	MBH	KW	SQ.FT	M^2	MBH	KW	%	%
211A-09	1,640	481	1,296	380	4,050	376	972	285	79	80

HONEYWELL RMA7890A2056 CONTROL ELECTRICAL RATINGS				
VOLTAGE	FREQUENCY	POWER DISSIPATION	MAX TOTAL CONNECTED LOAD	FUSING TOTAL CONNECTED LOAD
120 VAC (+10/-15%)	50/60 (±10%)	10 W MAX	2,000 VA	15 A MAX

HONEYWELL RMA7890A2056 CONTROL ENVIRONMENTAL RATINGS			
OPERATING AMBIENT TEMPERATURE	STORAGE AMBIENT TEMPERATURE	MAXIMUM HUMIDITY	MAXIMUM VIBRATION
-40°F to 140°F	-40°F to 150°F	85 %RH	0.5 G

GG8116 R0 (09/29)
Printed in U.S.A.

These specifications are subject to change without notice.

©2026 PB Heat, LLC. All rights reserved.

Steam Piping

Option 1

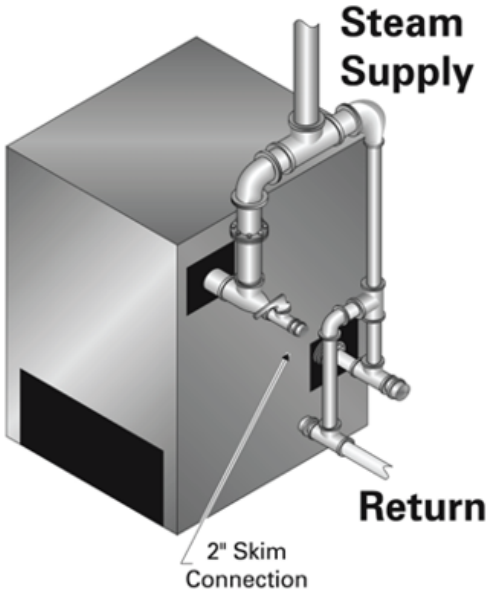

Option 2

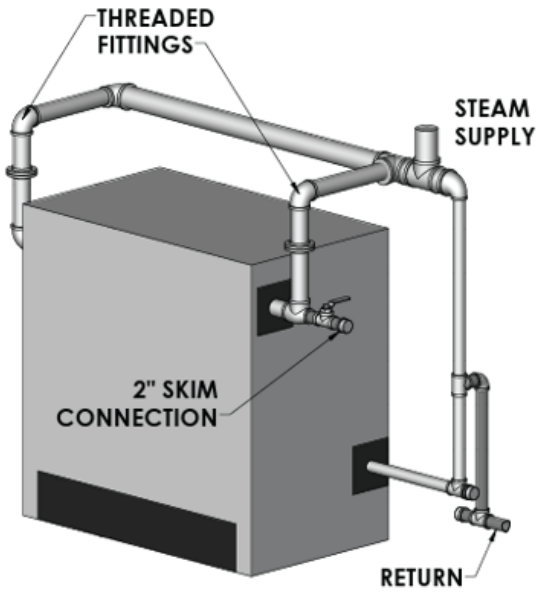

HEADER, RISER & EQUALIZER SIZING									
BOILER MODEL NUMBER	HEADER SIZE	OPTION 1				OPTION 2			
		END RISERS		EQUALIZERS		END RISERS		EQUALIZERS	
		NO.	SIZE	NO.	SIZE	NO.	SIZE	NO.	SIZE
211A-10	6”	2	5”	1	3”	—	—	—	—

BOILER SPECS					
BOILER MODEL NUMBER	GAS CONNECTION SIZE (NAT. GAS)	DRAFT HOODS NO. & SIZE	FLUE SIZE TO STACK	CHIMNEY SIZE	APPROX. SHIPPING WEIGHT (LBS.)
211A-10	1-1/2”	(2) 14”	17”	17” X 20’	5,320

These specifications are subject to change without notice.
©2026 PB Heat, LLC. All rights reserved.

Boiler Dimensions

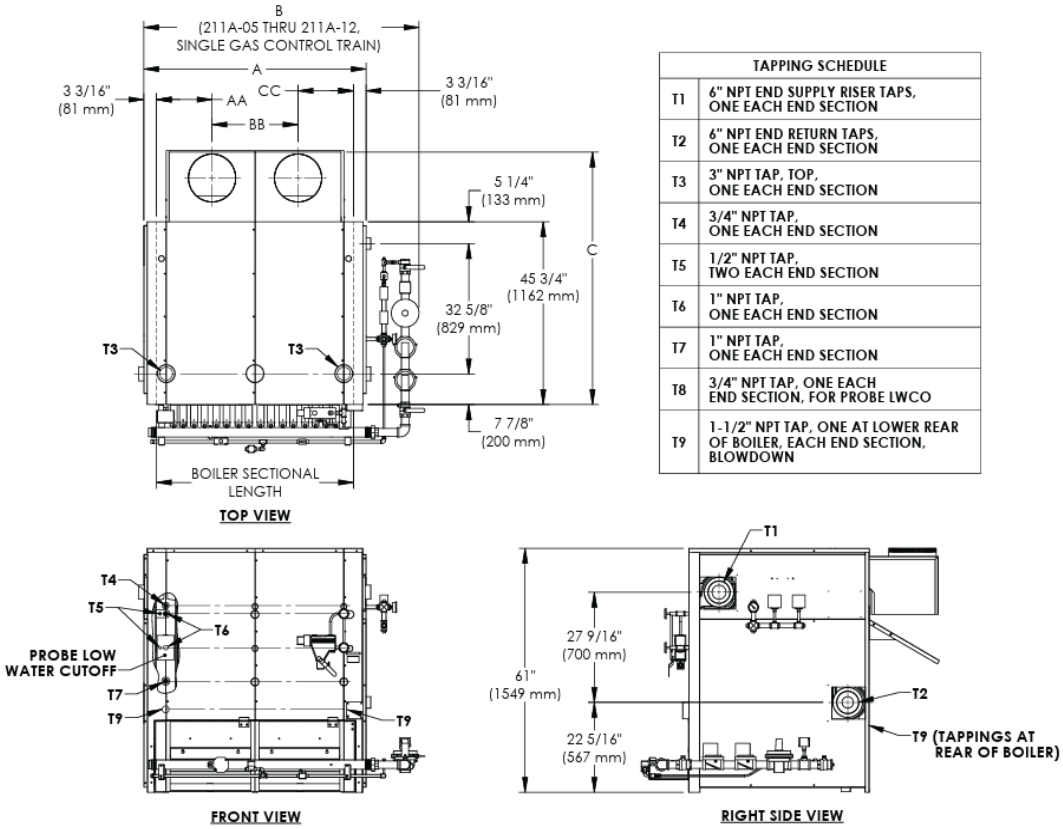

TAPPING SCHEDULE	
T1	6" NPT END SUPPLY RISER TAPS, ONE EACH END SECTION
T2	6" NPT END RETURN TAPS, ONE EACH END SECTION
T3	3" NPT TAP, TOP, ONE EACH END SECTION
T4	3/4" NPT TAP, ONE EACH END SECTION
T5	1/2" NPT TAP, TWO EACH END SECTION
T6	1" NPT TAP, ONE EACH END SECTION
T7	1" NPT TAP, ONE EACH END SECTION
T8	3/4" NPT TAP, ONE EACH END SECTION, FOR PROBE LWCO
T9	1-1/2" NPT TAP, ONE AT LOWER REAR OF BOILER, EACH END SECTION, BLOWDOWN

BOILER DIMENSIONS								
BOILER MODEL NUMBER	LENGTH & WIDTH DIMENSIONS						BOILER SECTION LENGTH	
	A		B		C			
	INCH	MM	INCH	MM	INCH	MM	INCH	MM
211A-09	61-7/8	1,572	73-1/4	1,861	65	1651	55-1/2	1,410

FLUE COLLECTOR CENTER LINES						
BOILER MODEL NUMBER	FLUE CONNECTION CENTERLINE DIMENSION					
	AA		BB		CC	
	INCH	MM	INCH	MM	INCH	MM
211A-10	13-1/2	343	25-3/8	645	—	—

FLUE COLLECTOR CONNECTIONS							
BOILER MODEL NUMBER	FLUE CONNECTIONS			VENT CONNECTOR DIAMETER		CHIMNEY DIAMETER X 20 FT (6M) HIGH	
	NO.	SIZE					
		INCH	MM	INCH	MM	INCH	MM
211A-10	2	14	356	17	432	17	432

These specifications are subject to change without notice.
©2026 PB Heat, LLC. All rights reserved.

Gas Train/Ignition System

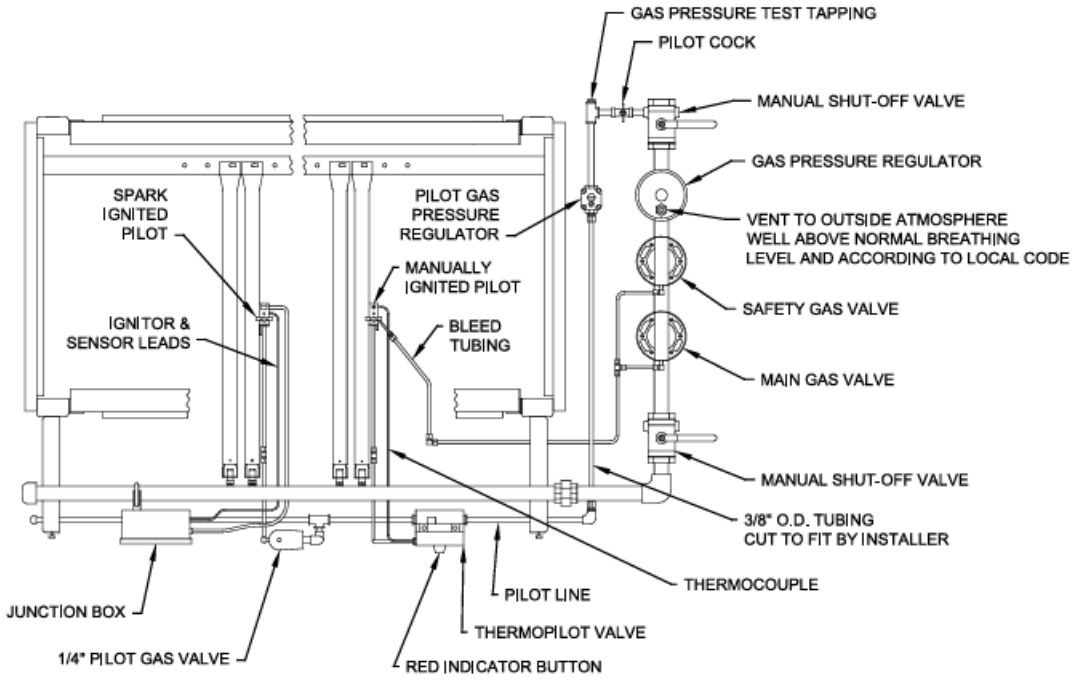

Gas Pressure Ratings			
Natural Gas		LP Gas	
Min	Max	Min	Max
3.5” W.C.	13.5” W.C.	8” W.C.	13.5” W.C.
0.13 PSI	0.49 PSI	0.29 PSI	0.49 PSI

IGNITION SYSTEM GUIDE			
BOILER MODEL NUMBER	SYSTEM[1,2,3]		TOTAL NUMBER OF PILOTS[3]
	E1-E*	E2-E*	
211A-10	X	—	1

(1) E*-E is the standard system on all sizes for natural and LP gas.
(2) “E” in E1-E, designates electric (spark) ignition of intermittent burning pilot.
(3) The number”1” in E1-E, designates the number of electronically supervised pilots. Remaining pilots will be a thermally supervised constant burning pilot.

These specifications are subject to change without notice.
©2026 PB Heat, LLC. All rights reserved.

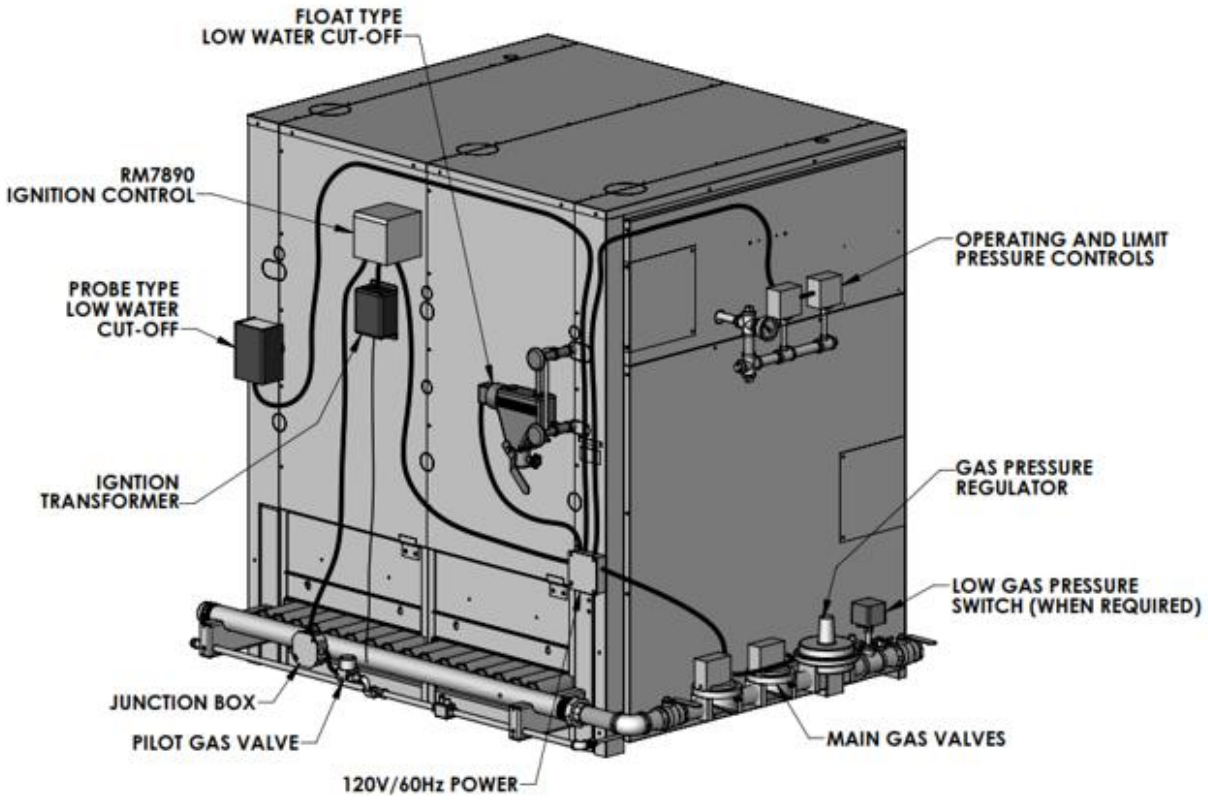

Optional Equipment:

- Factory assembled base
- Factory assembled sections
- Factory fire test of packaged boilers (nat. gas only)
  - Functional w/o combustion report
  - Comprehensive w/combustion report
- 1-1/2” Inspection tappings intermediate sections only (one per section at lower front) w/brass plug
- 1-1/2” inspection tappings intermediate sections only (one per section at lower front) w/nipple & cap
- Mounting of optional controls on packaged boilers
- Mounting of control panel on packaged boilers

These specifications are subject to change without notice.
©2026 PB Heat, LLC. All rights reserved.